Trio GENERATOR

Perkins

MADE IN TURKEY

International Organization for Standardization ISO 14001:2015

ISO 9001

OUTPUT VALUES

Standby Power	Voltage	230/400
Standby Power	kVA	660
Standby Power	kW	528
Standby Power	Amper	950
Prime Power	Voltage	230/400
Prime Power	kVA	600

Prime Power	kW	480
Prime Power	Amper	864

DIESEL ENGINE

Brand	PERKINS
Model	2806A-E18TAG1
Max. Total Output Pow. (kWm/hp)	495/663.8
Cylinder Displacement (lt)	18,13
Cylinder Orientation	6 Single Line
Bore x Stroke(mm*mm)	145 X 183
Compression Ratio	14,5:1
Governor Type	ECM
Rotation	1500 RPM
Aspiration System	Natural
Injection	Direct
Cooling System	Water Cooled
Electrical System(V DC)	24
Oil Capacity (lt)	62
Engine Coolant Capacity (lt)	50
Fuel Cons. %50 (lt/h)	53
Fuel Cons. %75 (lt/h)	76
Fuel Cons. %100 (lt/h)	100

ALTERNATOR

Standby Power (kVa/kw)	660/528
Prime Power (kVa/kw)	600/480
Brand	LEROY SOMER
Output Voltage (V)	231/400
Frequency (Hz)	50
Stationary Vol. Regulation(±)	0,01
Short Circuit Current	%300 (10 sec)
Insulation	H
Protection	IP23
E ciency (%)	92
Overloading	110% for 1 hour
Power Factor (cos Q=0.8)	0,8
Tot. Harmonic Dist. Rate	<1 %
Connection Type	Star
Number of Pole	4
Number of Bearing	Single

DIMENSIONS & WEIGHT

Without Canopy	Width	2000 mm
Without Canopy	Length	4500 mm
Without Canopy	High	2500 mm
Without Canopy	Weight	3450 kg
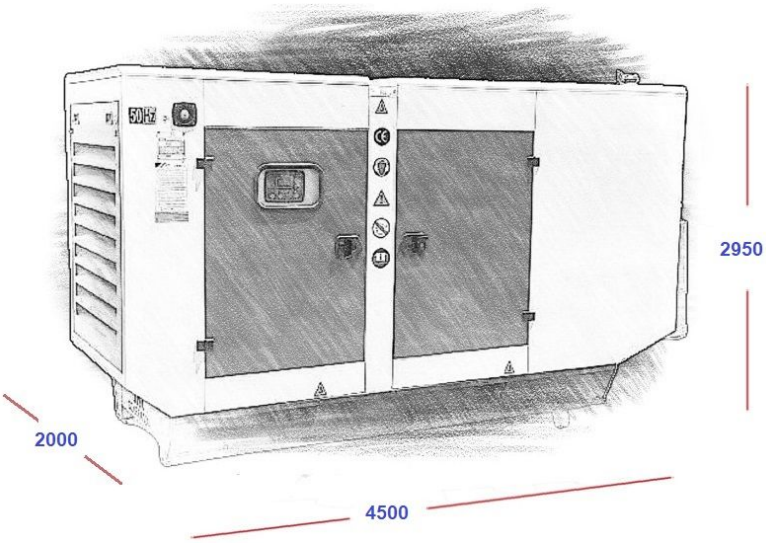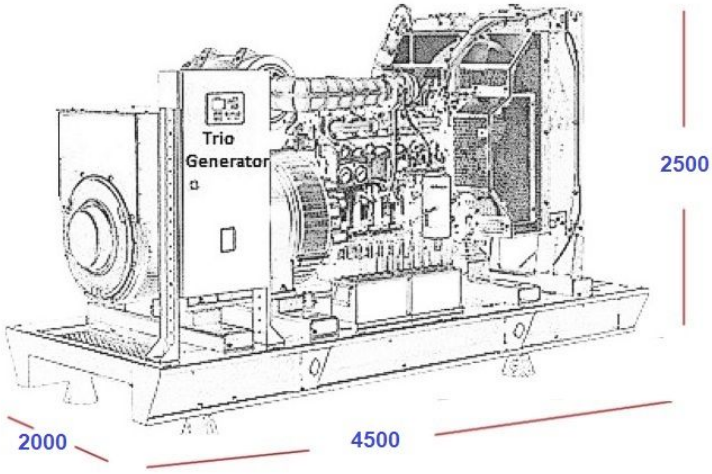
Without Canopy	Fuel Tank Capacity	1200 lt
With Canopy	Width	2000 mm
With Canopy	Length	4500 mm
With Canopy	High	2950 mm
With Canopy	Weight	5410 kg
With Canopy	Fuel Tank Capacity	1200 lt